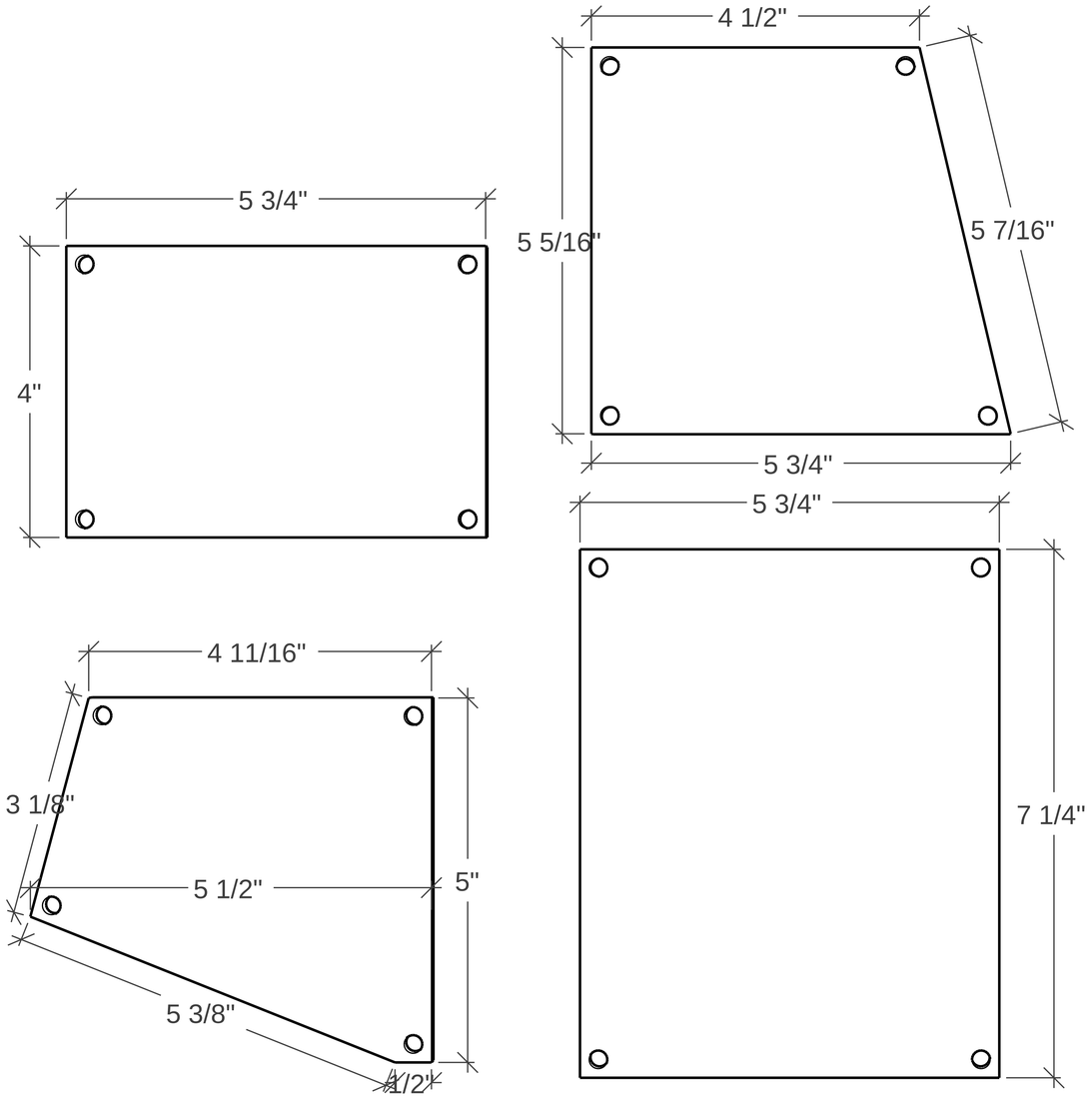
5 3/4"
4"
4 1/2"
5 5/16"
5 7/16"
5 3/4"
5 3/4"
7 1/4"
4 11/16"
3 1/8"
5 1/2"
5"
5 3/8"
1/2"